# Pressure Reducing Valve

# Model 42T

The BERMAD model 42T is an elastomeric, line pressure driven pilot operated pressure control valve.

Designed specifically for advanced fire protection systems and the latest industry standards.

The 42T reduces high upstream pressure to a precise, preset, stable downstream pressure.

Due to its exceptional reliability and low head loss the 42T is ideal for control of fire pump discharge.

It is also well-suited to prevent over-pressure in sprinklers, hose stations, and other discharge devices.

As an option the 42T can be fitted with a valve position indicator that can include a limit switch suitable for Fire & Gas monitoring systems.

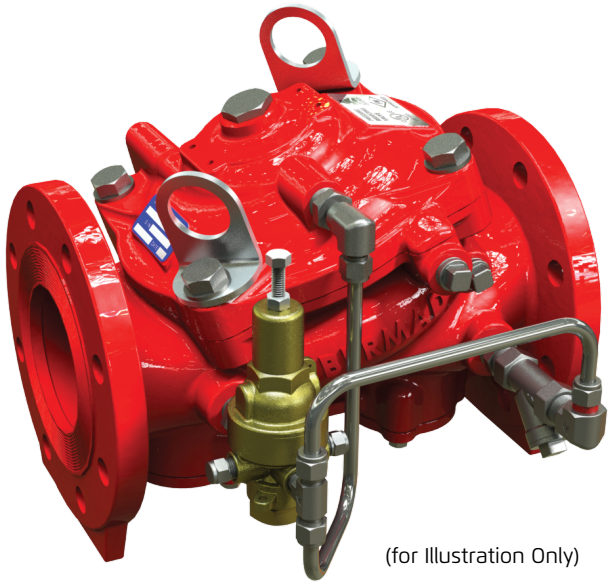

(for Illustration Only)

## Benefits and Features

- **Safety and reliability**
  - Time-proven, simple, fail-safe actuation
  - Single piece, rugged, elastomeric diaphragm seal - VRSD technology
  - Obstacle-free, uninterrupted flow path
  - Suitable for pump discharge control, due to low headloss
  - No mechanical moving parts
- **High performance**
  - Fast, smooth stabilizing response to pressure fluctuations
  - Very high flow efficiency
  - Straight through Y - type body
  - Approved for PN25/365 psi
- **Specifically-designed for fire protection**
  - Face-to-face length standardized to ISO 5752 EN 558-1
  - Accurate and stabilizing pressure control
  - Meets the requirements of industry standards
- **Quick and easy maintenance**
  - In-line serviceable
  - Fast and easy cover removal

## Approvals

| | |
|---|---|
| c UL us LISTED | UL-Listed<br>Special System Water Control Valves, Pressure Reducing (VLMT)<br>Sizes 1½" - 16" |
| FM APPROVED | FM Approved<br>Pressure Reducing Valves<br>Sizes 1½" -10" |
| DNV | Det Norske Veritas<br>(Type Approval) |
| ABS TYPE APPROVAL PROGRAM | ABS<br>American Bureau of Shipping<br>Type Approval |
| Lloyd's Register | Lloyd's Register<br>Type Approval |

## Typical Applications

- Sprinkler feed systems
- Fire pump discharge control
- Hose station supply
- Fire hydrant supply
- Foam systems
- Zonal pressure control

## Additional Features

- Sea water compatibility
- Large control filter
- Integrated downstream relief valve
- Position limit switches

BERMAD

## Operation

(for Illustration Only)

**Valves 6" and Smaller**

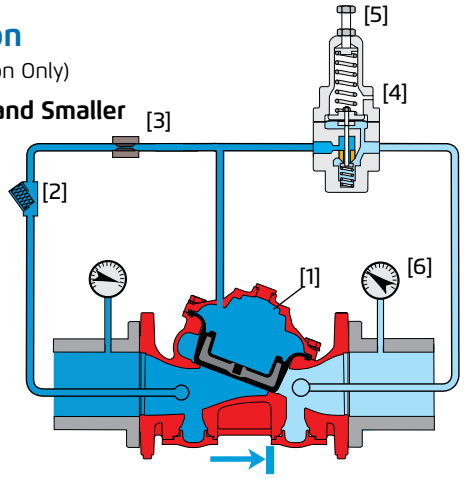


**Valve Closed** (non-flow conditions)

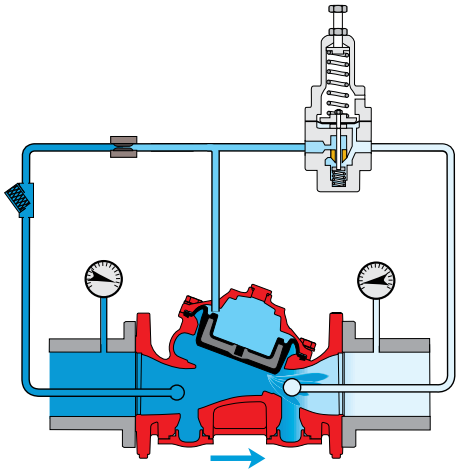

**Valve Open** (flow condition)

**Valves 8" and Larger**

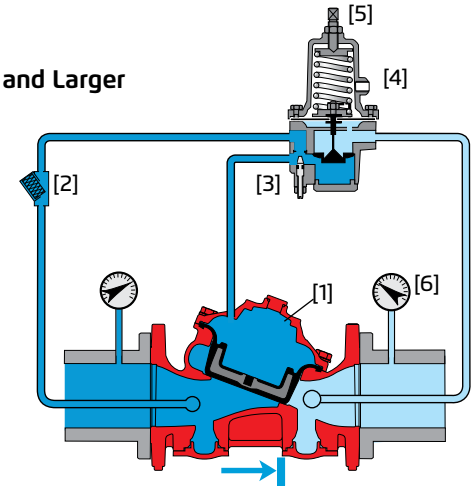


**Valve Closed** (non-flow conditions)

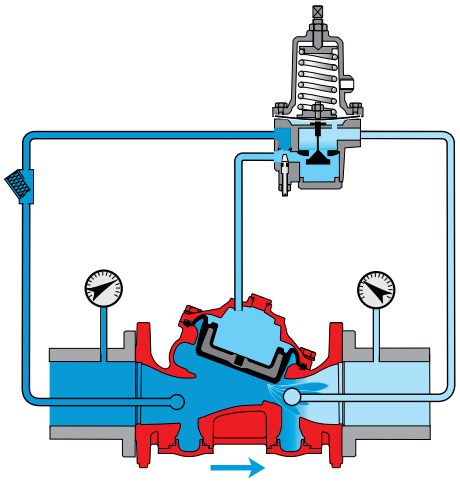

**Valve Open** (flow condition)

The BERMAD Model 42T pressure control valve, reduces water pressure automatically and accurately from a high inlet pressure to a lower, preset outlet pressure. The outlet set pressure can be adjusted by way of the pilot adjusting screw [5]. The valve operates under both flow and static conditions. The pressure-reducing pilot valve [4] senses changes in outlet pressure [6] and modulates the control valve to maintain the preset outlet pressure. When outlet pressure rises above the preset pressure , the pilot valve throttles, enabling pressure to accumulate in the control chamber [1], this causes the control valve to close further and reduce outlet pressure. When outlet pressure falls, the pilot valve opens wider, releasing pressure from the control chamber. This causes the control valve to open wider and increase outlet pressure. An integral restrictor [3] controls the valve's closing speed. For valves 8" and larger an adjustable needle valve is provided.

## System P&ID

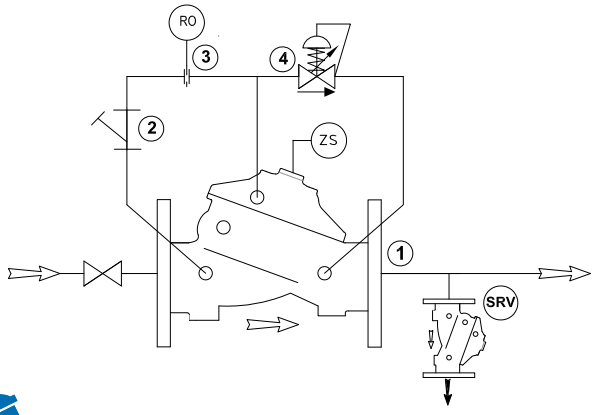


**Components**

| | |
|---|---|
| 1 | BERMAD 400Y Water Control Valve |
| 2 | Y Strainer |
| 3 | Restriction Orifice |
| 4 | Pressure Reducing Pilot Valve |

**Optional System Items**

| | |
|---|---|
| ZS | Limit Switch Assembly |
| SRV | BERMAD 43T Pressure Relief Valve |
| I | Visual Indicator |

See also Factory Fitted Options under the Valve Code Designations on the last page

## System Installation

A typical installation of the BERMAD model 42T features a pilot valve for the automatic stable and accurate reduction of water pressure from a high upstream value to a preset lower downstream value, regardless of fluctuating upstream pressure or flow. A unique actuator design ensures quick and smooth valve action.

Installed singly, the 42T provides a standard pressure-reducing system. Installed in parallel, two 42T valves provide high flow rates, redundancy, and zero downtime for maintenance. Installed in series, two 42T valves can provide a two-stage, high reduction in pressure and/or added protection to a reduced-pressure zone.

To comply with the requirements outlined in the FM and UL standards, a pressure relief valve is to be installed on the downstream side of any approved or listed pressure reducing valve.

The BERMAD 43T Pressure Relief valve is ideally suited for this purpose, as shown in the installation illustrations.

**Sprinkler System Pressure Reduction**

- Reduces a high, unstable pressure supply to a preset, stable system pressure
- Sets the sprinkler pressure to suit the system design
- For zonal pressure control

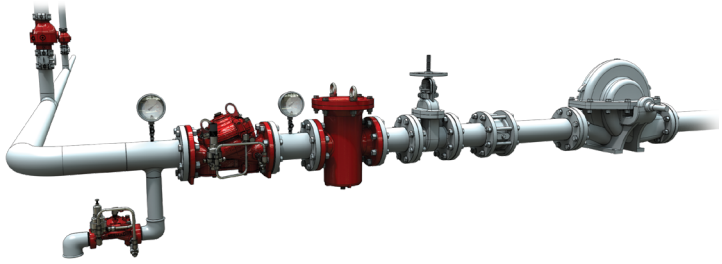

**Hose System Pressure Reduction**

- Reduces a high/unstable pressure supply to suit fire hose pressure
- Limits fire hose pressure to 7 bar (100 psi) to meet NFPA 14 regulations for maximum allowable hose pressure supply

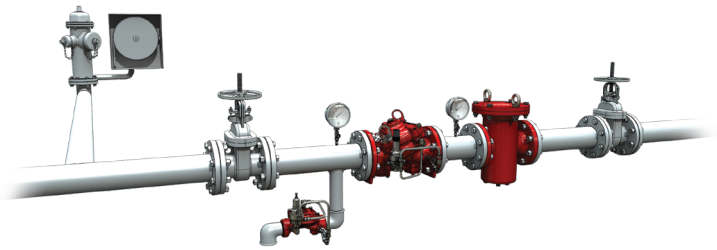

**Two-Stage Pressure Reduction**

- High pressure reduction to a low, preset, stable system pressure (when pressure reduction differential is more than 12 bar/175 psi)
- Backup pressure reducing valve in-line to a master valve to secure pressure zone rating at all times

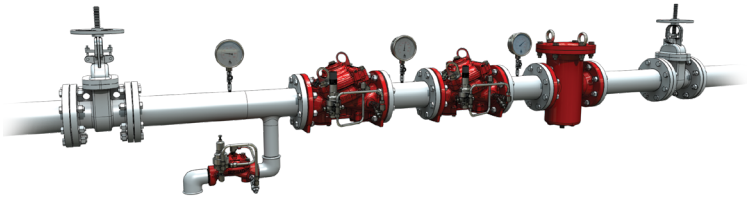

(for Illustration Only)

## Engineer Specifications

The pressure reducing valve shall maintain a constant, preset, downstream pressure regardless of fluctuating upstream pressure or flow.

The valve shall be UL listed and FM approved, 25 bar / 365 psi rated, line pressure driven and pilot operated.

It shall be of the elastomeric-type with a straight-through Y-type body.

The valve shall have an unobstructed flow path with no stem guide or supporting ribs.

Valve actuation shall be accomplished by a single-piece, rolling diaphragm bonded with a rugged radial seal disc.

The diaphragm assembly shall be the only moving part.

Maintenance, inspection or service shall be carried out in-line and without removal of the control trim.

The valve and it's entire control trim shall be supplied pre-assembled and hydraulically tested by a factory certified to ISO 9000 and 9001 standards.

# BERMAD Fire Protection

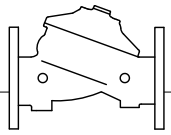

Model FP 400Y - 42T

**400Y Series**

## Technical Data

### Available Sizes (inch)

- Flanged - 1½, 2, 3, 4, 6, 8, 10, 12, 14 & 16"
- Grooved - 1½, 2, 3, 4, 6 & 8"
- Threaded - 1½ & 2"

### Pressure Rating

- ANSI#150 - 16 bar / 235 psi
- ANSI#300 - 1½" to 10" 25 bar / 365 psi
  12" to 16" 20 bar / 300 psi
- Grooved/Threaded - Refer to Code Designations table below
- Setting range: 4 - 12 bar (60 - 175 psi)

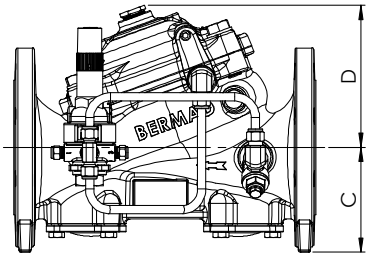


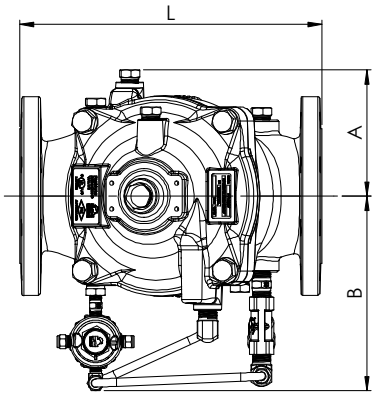


### Elastomer

- HTNR - Fabric Reinforced High Temperature Compound - See engineering data

| Valve Size | 1½" DN40 | | 2" DN50 | | 3" DN80 | | 4" DN100 | | 6" DN150 | | 8" DN200 | | 10" DN250 | | 12" DN300 | | 14" DN350 | | 16" DN400 | |
|---|---|---|---|---|---|---|---|---|---|---|---|---|---|---|---|---|---|---|---|---|
| Unit | mm | in | mm | in | mm | in | mm | in | mm | in | mm | in | mm | in | mm | in | mm | in | mm | in |
| L [1] | 230 | 9.1 | 230 | 9.1 | 310 | 12.2 | 350 | 13.8 | 480 | 18.9 | 600 | 23.6 | 730 | 28.7 | 850 | 33.5 | 980 | 38.6 | 1100 | 43.3 |
| L [2] | 230 | 9.1 | 238 | 9.4 | 326 | 12.8 | 368 | 14.5 | 506 | 19.9 | 626 | 24.6 | 730 | 28.7 | 888 | 35 | 980 | 38.6 | 1100 | 43.3 |
| A | 77.5 | 3 | 77.5 | 3 | 100 | 3.94 | 115 | 4.53 | 140 | 5.51 | 172 | 6.77 | 204 | 8 | 242 | 9.53 | 242 | 9.53 | 242 | 9.53 |
| B | 155 | 6.1 | 155 | 6.1 | 251 | 9.88 | 266 | 10.47 | 372 | 14.65 | 490 | 19.29 | 490 | 19.29 | 656 | 25.83 | 656 | 25.83 | 656 | 25.83 |
| C | 64 | 2.52 | 77 | 3.03 | 106 | 4.17 | 121 | 4.76 | 140 | 5.51 | 172 | 6.77 | 204 | 8.03 | 247 | 9.72 | 272 | 10.71 | 316 | 12.44 |
| D | 120 | 4.69 | 120 | 4.69 | 146 | 5.75 | 158 | 6.22 | 228 | 9 | 295 | 11.65 | 296 | 11.65 | 441 | 17.36 | 441 | 17.36 | 415 | 16.3 |
| Kv / Cv [4] | 68 / 79 | | 80 / 92 | | 190 / 219 | | 345 / 398 | | 790 / 912 | | 1160 / 1340 | | 1355 / 1565 | | 2370 / 2737 | | 2850 / 3292 | | 3254 / 3758 | |
| Leq [3]: m/ft | 2 / 7 | | 5 / 16 | | 7 / 23 | | 9 / 30 | | 15 / 49 | | 27 / 89 | | 62 / 203 | | 52 / 171 | | 59 / 194 | | 88 / 289 | |
| Kg/lb flanged#150/ISO16 | 17.9 / 39.4 | | 19.3 / 42.5 | | 34 / 74.8 | | 44 / 95.8 | | 87.3 / 192 | | 150 / 331 | | 180 /397 | | 323 / 712 | | 356 / 784 | | 403 / 886 | |

Notes: [1] Refers to the length dimensions for Raised Face ANSI #150, ISO 16 Flanged, Threaded and Grooved valves
[2] Refers to the length dimensions for Raised Face ANSI #300 and ISO 25 Flanged valves
[3] Leq (Equivalent Pipe Length) refers to a fully opened valve with turbulent flow in new steel pipe schedule 40, values given for general consideration only
[4] Kv/Cv values given for a fully opened valve
[5] Exact dimensions for the trim envelope may vary with specific component positioning

## Valve Code Designations

FP | 6" | 42T | H | C | A5 | PR | NN | 6N

| Category | Code |
|---|---|
| Standard | FP |
| Seawater | FS |
| Foam Concentrate | FC |

| Valve Size | |
|---|---|
| 1½" | 40 mm |
| 2" | 50 mm |
| 3" | 80 mm |
| 4" | 100 mm |
| 6" | 150 mm |
| 8" | 200 mm |
| 10" | 250 mm |
| 12" | 300 mm |
| 14" | 350 mm |
| 16" | 400 mm |

| Installation | Code |
|---|---|
| Horizontal/Vertical | H |

| Material Body & Cover [1] | Code |
|---|---|
| Ductile Iron A356 [2] | C |
| Steel ASTM A216 WCB [2] | S |
| Stainless Steel 316 | N |
| Nickel Al Bronze C95800 | U |
| Super Duplex Grade 5A | D |

| End Connections | Code |
|---|---|
| ANSI#150RF | A5 |
| ANSI#150FF | a5 |
| ANSI#300RF | A3 |
| ISO PN16 | 16 |
| ISO PN25 | 25 |
| Grooved 365psi/PN25, ANSI C606 | V2 |
| Threaded 365psi/PN25, ISO-7-Rp | BH |
| Threaded 365psi/PN25, NPT | NH |

| Coating | Code |
|---|---|
| Polyester Red | PR |
| High Build Epoxy | ER |
| Uncoated | UC |

| Tubing & Fittings | Code |
|---|---|
| Stainless Steel 316 | NN |
| Monel | MM |
| Super Duplex | DD |

| Factory Fitted Options | Code |
|---|---|
| Pressure Gauge | 6 |
| Stainless Steel Glycerin Pressure Gauge Assembly | 6n |
| Monel Pressure Gauge Assembly | 6m |
| Special Elastomer EPDM | E1 |
| Special Elastomer NBR | E3 |
| Large Control Filter | F |
| Stainless Steel 316 Trim accessories | N |
| Pressure Transmitter | Q |
| Stainless Steel 316 Seat | T |

Notes:
[1] Other materials available, see engineering data
[2] Coated internally and externally

www.bermad.com

© Copyright 2007-2012 Bermad CS Ltd. All Rights Reserved. The information contained in this document is subject to change without notice. BERMAD shall not be liable for any errors contained herein.